orlight®

FROM SOURCE TO SITE

Wiring instructions

MINI LED FIXTURE

ORLLM22

WARNING - The total power consumption of lamps in series should not exceed the total power output of the LED Driver.

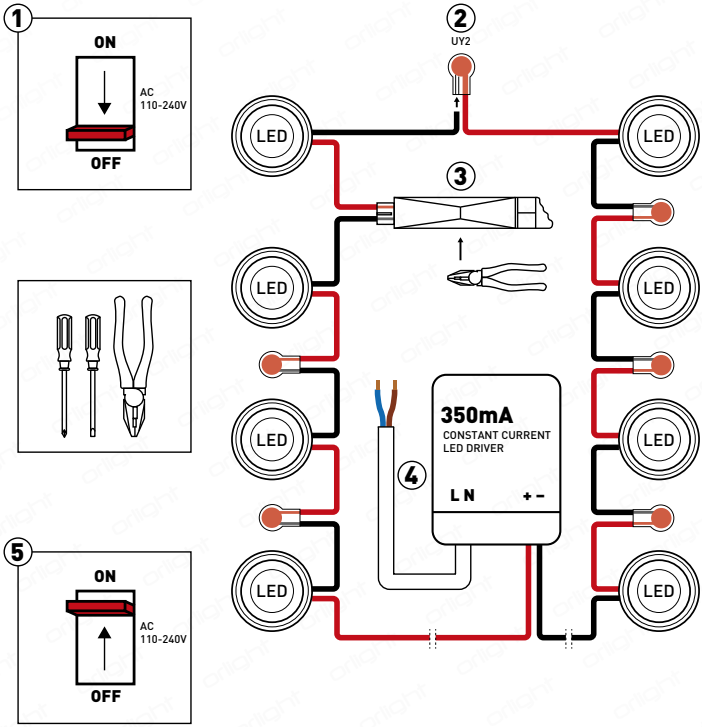

INSTALLATION - Orlight does not recommend cutting of holes prior to receipt of product in hand. Please see reverse for full instructions.

We recommend that this product is installed by a competent person in accordance with the latest edition of the IET Wiring Regulations BS 7671 "Requirements for Electrical Installations" and the Buildings Regulations, as may be applicable subject to the location and country of the job or installation.

For more information and installation guide lines please refer to "Guide on Lighting Risks and Regulations" which can be downloaded from the website:
https://www.orlight.com/content/files/orlight/resources/Guide_on_Lighting_Risks_and_Regulations_2020.pdf